Parts & Hardware

A	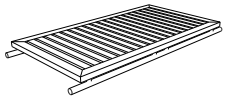	x 1 PC
B		x 2 PC
C		x 1 PC
D		x 8 PC
E	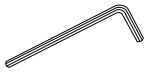	x 1 PC

COTSWOLD TEAK
LUXURY GARDEN FURNITURE

cotswoldteak.com
customerservices@cotswoldteak.com
Hargreaves Road, Groundwell Industrial Estate, Swindon, SN25 5AZ

COTSWOLD TEAK
LUXURY GARDEN FURNITURE

Coate Teak Coffee Table
Assembly Instructions

Please read through these instructions and ensure they are kept for future reference.
All parts and hardware are listed on the back of this guide.

WHEN ASSEMBLING THIS PRODUCT PLEASE PLACE PARTS ON A SOFT SURFACE TO AVOID DAMAGE OR SCRATCHES.

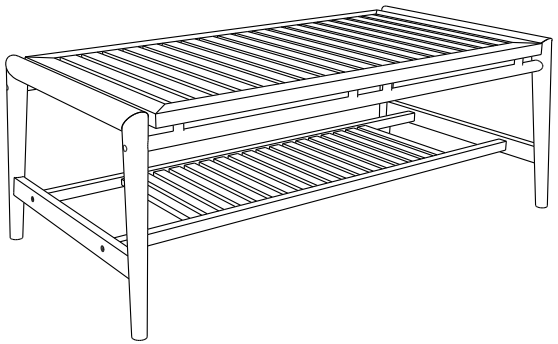

Care Instructions

This product is made from Teak Wood. Wood is a natural material, variations in colour and texture may occur.
We recommend assembling your coffee table on a non-abrasive surface such as a dust sheet or the original cardboard packaging.
Please avoid positioning your furniture on uneven surfaces.
To preserve its condition and avoid fading over time, avoid exposing your table to direct sunlight.
We advise against the use of abrasive or corrosive cleaning agents as discolouration may occur.
In the event of any spills, wipe them immediately with a soft damp cloth to avoid stains.
To prevent any damage to your table, we advise against the use of power tools to assemble.
Always use place mats and coasters, to prevent scratching, heat rings and water marks. Do not place hot or cold items directly onto your furniture.
Whilst suitable for indoor and outdoor use, we recommend storing your furniture inside or undercover to preserve its condition during the winter months.
Please do not drag the furniture, we recommend to always lift it to move, avoiding any breakages.
We advise that two people assemble the product together. Parts can be heavy.

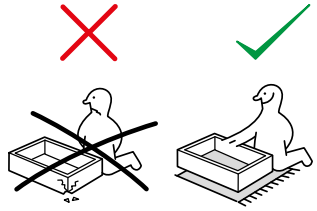

1

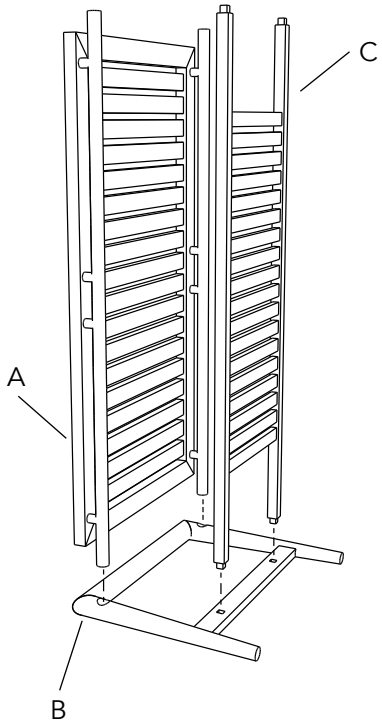

2

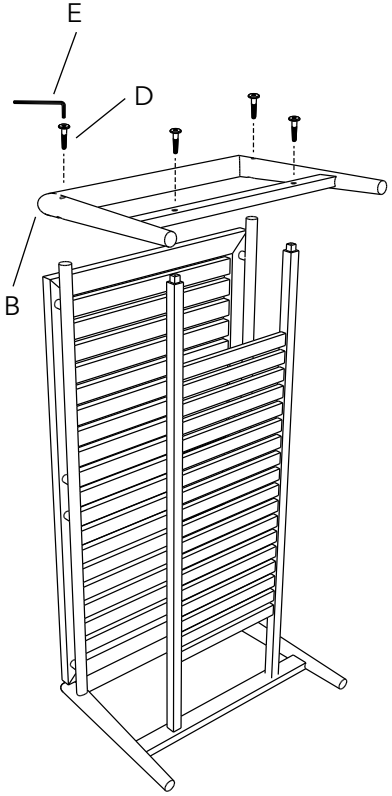

3

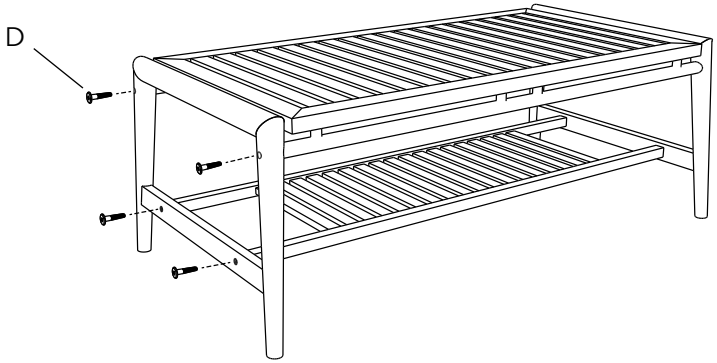

4

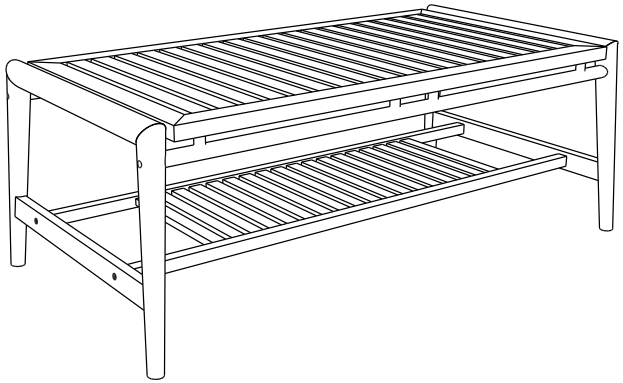

IICTCT08